R&S®ZVA-Zxx Millimeter-Wave Converters

Specifications

ROHDE&SCHWARZ

Test & Measurement

Data Sheet | 09.00

CONTENTS

General information 3
Definitions 4
Electrical data 5
Test port 5
Source input (RF IN) 6
Local oscillator input (LO IN) 6
Measurement output (MEAS OUT) 6
Reference output (REF OUT) 7
Attenuation control input (ATT), R&S®ZVA-Z90E and R&S®ZVA-Z110E only 7
System characteristics 8
Power supply input 18
General specifications 19
Ordering information 25

General information

The R&S®ZVA-Zxx converters are optional external supplements for the four-port vector network analyzers (R&S®ZVT20 with at least four ports, R&S®ZVA24, R&S®ZVA40, R&S®ZVA50, or R&S®ZVA67), allowing measurements in the frequency range from 75 GHz to 500 GHz. Converters are available for the frequency bands 50 GHz to 75 GHz (R&S®ZVA-Z75), 60 GHz to 90 GHz (R&S®ZVA-Z90E), 75 GHz to 110 GHz (R&S®ZVA-Z110 and R&S®ZVA-Z110E), 90 GHz to 140 GHz (R&S®ZVA-Z140),110 GHz to 170 GHz (R&S®ZVA-Z170), 140 GHz to 220 GHz (R&S®ZVA-Z220), 220 GHz to 325 GHz (R&S®ZVA-Z325), and 325 GHz to 500 GHz (R&S®ZVA-Z500). They consist of a reflectometer module containing a directional coupler, a frequency multiplier for upconversion, two harmonic mixers as downconverters, and a manually adjustable attenuator, that allows the output power to be varied by more than 20 dB. In the case of a model E, as R&S®ZVA-Z90E and R&S®ZVA-Z110E, an electronically adjustable attenuator is available.

As a basic test setup, for example an R&S®ZVA24 four-port vector network analyzer including the R&S®ZVA-K8 and the R&S®ZVA24-B16 option is required. Alternatively, one of the other above mentioned vector network analyzers can be used together with the appropriate options. For the R&S®ZVA-Z90E and R&S®ZVA-Z110E, additionally the R&S®ZVA-B8 option is recommended.

The R&S®ZVA-Zxx converters come with the following:

- DC power adapter for the input voltage range from 100 V to 240 V (AC) with ±10 % tolerance
- Hex ball driver
- Two coaxial cables with SMA connectors for the reference and measurement output signals
- Waveguide-to-waveguide adapter acting as test port saver

Definitions

General
Product data applies under the following conditions:

- Three hours storage at ambient temperature followed by 30 minutes warm-up operation
- Specified environmental conditions met
- Recommended calibration interval adhered to
- All internal automatic adjustments performed, if applicable

Specifications with limits
Represent warranted product performance by means of a range of values for the specified parameter. These specifications are marked with limiting symbols such as <, ≤, >, ≥, ±, or descriptions such as maximum, limit of, minimum. Compliance is ensured by testing or is derived from the design. Test limits are narrowed by guard bands to take into account measurement uncertainties, drift and aging, if applicable.

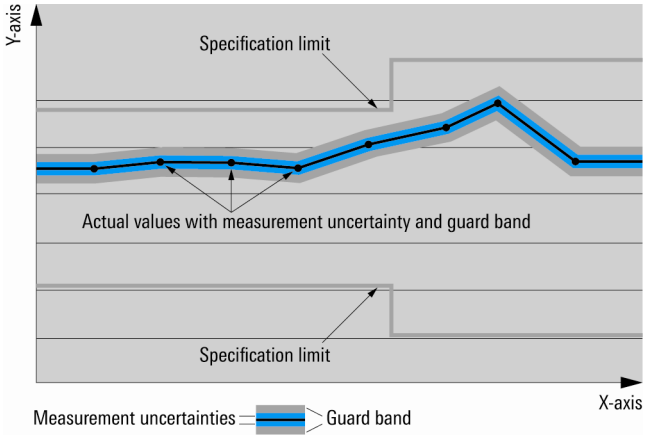

Specifications without limits
Represent warranted product performance for the specified parameter. These specifications are not specially marked and represent values with no or negligible deviations from the given value (e.g. dimensions or resolution of a setting parameter). Compliance is ensured by design.

Typical data (typ.)
Characterizes product performance by means of representative information for the given parameter. When marked with <, > or as a range, it represents the performance met by approximately 80 % of the instruments at production time. Otherwise, it represents the mean value.

Nominal values (nom.)
Characterize product performance by means of a representative value for the given parameter (e.g. nominal impedance). In contrast to typical data, a statistical evaluation does not take place and the parameter is not tested during production.

Measured values (meas.)
Characterize expected product performance by means of measurement results gained from individual samples.

Uncertainties
Represent limits of measurement uncertainty for a given measurand. Uncertainty is defined with a coverage factor of 2 and has been calculated in line with the rules of the Guide to the Expression of Uncertainty in Measurement (GUM), taking into account environmental conditions, aging, wear and tear.

Typical data as well as nominal and measured values are not warranted by Rohde & Schwarz.

Electrical data

Test port

Frequency range	R&S®ZVA-Z75	50 GHz to 75 GHz
	R&S®ZVA-Z90E	60 GHz to 90 GHz
	R&S®ZVA-Z110 and R&S®ZVA-Z110E	75 GHz to 110 GHz
	R&S®ZVA-Z140	90 GHz to 140 GHz
	R&S®ZVA-Z170	110 GHz to 170 GHz
	R&S®ZVA-Z220	140 GHz to 220 GHz
	R&S®ZVA-Z325	220 GHz to 325 GHz
	R&S®ZVA-Z500	325 GHz to 500 GHz
Waveguide designator Electronic Industries Alliance (EIA)	R&S®ZVA-Z75	WR15
	R&S®ZVA-Z90E	WR12
	R&S®ZVA-Z110 and R&S®ZVA-Z110E	WR10
	R&S®ZVA-Z140	WR08
	R&S®ZVA-Z170	WR06/WR6.5
	R&S®ZVA-Z220	WR05/WR5.1
	R&S®ZVA-Z325	WR03/WR3.4
	R&S®ZVA-Z500	WR02/WR2.2
Connector type	anti-cocking flange	precision waveguide flange compatible with UG387/U-M
Output power	at +7 dBm input power from the R&S®ZVA	
	R&S®ZVA-Z75	
	50 GHz to 58 GHz	+2 dBm
	58 GHz to 75 GHz	+4 dBm
	R&S®ZVA-Z90E	+2 dBm
	R&S®ZVA-Z110	+3 dBm
	R&S®ZVA-Z110E	+1 dBm
	R&S®ZVA-Z140	typ. +2 dBm
	R&S®ZVA-Z170	typ. –5 dBm
	R&S®ZVA-Z220	typ. –12 dBm
	R&S®ZVA-Z325	typ. –15 dBm
	R&S®ZVA-Z500	typ. –24 dBm
Output power attenuation	R&S®ZVA-Z75	0 dB to +25 dB
	R&S®ZVA-Z90E	0 dB to +20 dB
	R&S®ZVA-Z110 manually adjustable attenuator	0 dB to +25 dB
	R&S®ZVA-Z110E electronically adjustable attenuator	0 dB to +25 dB
	R&S®ZVA-Z140	0 dB to +20 dB
	R&S®ZVA-Z170	typ. 0 dB to +25 dB
	R&S®ZVA-Z220	typ. 0 dB to +20 dB
	R&S®ZVA-Z325	typ. 0 dB to +40 dB
	R&S®ZVA-Z500	typ. 0 dB to +40 dB
Output power accuracy	R&S®ZVA-Z75 at 0 dB attenuator setting	<5 dB
	R&S®ZVA-Z90E at 0 dB attenuator setting	<6 dB
	R&S®ZVA-Z110 at 0 dB attenuator setting	<5 dB
	R&S®ZVA-Z110E at 0 dB attenuator setting	<5 dB
	R&S®ZVA-Z140 at 0 dB attenuator setting	typ. <5 dB
	R&S®ZVA-Z170 at 0 dB attenuator setting	typ. <7 dB
	R&S®ZVA-Z220 at 0 dB attenuator setting	typ. <10 dB
	R&S®ZVA-Z325 at 0 dB attenuator setting	typ. <7 dB
	R&S®ZVA-Z500 at 0 dB attenuator setting	typ. <10 dB
Damage level	R&S®ZVA-Z75/-Z90E/-Z110/-Z110E	+15 dBm
	R&S®ZVA-Z140/-Z170/-Z220/-Z325/-Z500	+10 dBm

Source input (RF IN)

Connector type	R&S®ZVA-Z75	3.5 mm, female
	R&S®ZVA-Z90E	3.5 mm, female
	R&S®ZVA-Z110 and R&S®ZVA-Z110E	3.5 mm, female
	R&S®ZVA-Z140	3.5 mm, female
	R&S®ZVA-Z170	3.5 mm, female
	R&S®ZVA-Z220	3.5 mm, female
	R&S®ZVA-Z325	3.5 mm, female
	R&S®ZVA-Z500	3.5 mm, female
Frequency range	R&S®ZVA-Z75	8.33 GHz to 12.5 GHz
	R&S®ZVA-Z90E	10 GHz to 15 GHz
	R&S®ZVA-Z110 and R&S®ZVA-Z110E	12.5 GHz to 18.333334 GHz
	R&S®ZVA-Z140	7.5 GHz to 11.666667 GHz
	R&S®ZVA-Z170	9.166667 GHz to 14.166667 GHz
	R&S®ZVA-Z220	11.666667 GHz to 18.333334 GHz
	R&S®ZVA-Z325	12.22 GHz to 18.06 GHz
	R&S®ZVA-Z500	10.833333 GHz to 16.666667 GHz
Input power range	R&S®ZVA-Z75	+5 dBm to +10 dBm
	R&S®ZVA-Z90E	+4 dBm to +10 dBm
	R&S®ZVA-Z110 and R&S®ZVA-Z110E	+4 dBm to +10 dBm
	R&S®ZVA-Z140	+4 dBm to +10 dBm
	R&S®ZVA-Z170	+4 dBm to +10 dBm
	R&S®ZVA-Z220	+4 dBm to +10 dBm
	R&S®ZVA-Z325	+4 dBm to +10 dBm
	R&S®ZVA-Z500	+4 dBm to +10 dBm

Local oscillator input (LO IN)

Connector type	R&S®ZVA-Z75	3.5 mm, female
	R&S®ZVA-Z90E	3.5 mm, female
	R&S®ZVA-Z110 and R&S®ZVA-Z110E	3.5 mm, female
	R&S®ZVA-Z140	3.5 mm, female
	R&S®ZVA-Z170	3.5 mm, female
	R&S®ZVA-Z220	3.5 mm, female
	R&S®ZVA-Z325	3.5 mm, female
	R&S®ZVA-Z500	3.5 mm, female
Frequency range	R&S®ZVA-Z75	8.283 GHz to 12.55 GHz
	R&S®ZVA-Z90E	9.95 GHz to 15.05 GHz
	R&S®ZVA-Z110 and R&S®ZVA-Z110E	9.3375 GHz to 13.7875 GHz
	R&S®ZVA-Z140	11.2125 GHz to 17.5375 GHz
	R&S®ZVA-Z170	10.97 GHz to 17.03 GHz
	R&S®ZVA-Z220	11.642 GHz to 18.359 GHz
	R&S®ZVA-Z325	13.725 GHz to 20.3375 GHz
	R&S®ZVA-Z500	13.529 GHz to 20.8458 GHz
Input power range	R&S®ZVA-Z75	+5 dBm to +10 dBm
	R&S®ZVA-Z90E	+5 dBm to +10 dBm
	R&S®ZVA-Z110 and R&S®ZVA-Z110E	+5 dBm to +10 dBm
	R&S®ZVA-Z140	+5 dBm to +10 dBm
	R&S®ZVA-Z170	+5 dBm to +10 dBm
	R&S®ZVA-Z220	+5 dBm to +10 dBm
	R&S®ZVA-Z325	+5 dBm to +10 dBm
	R&S®ZVA-Z500	+5 dBm to +10 dBm

Measurement output (MEAS OUT)

Connector type		SMA, female
Frequency range	R&S®ZVA-Z75	10 MHz to 300 MHz
	R&S®ZVA-Z90E	10 MHz to 300 MHz
	R&S®ZVA-Z110 and R&S®ZVA-Z110E	10 MHz to 300 MHz
	R&S®ZVA-Z140	10 MHz to 300 MHz
	R&S®ZVA-Z170	10 MHz to 300 MHz
	R&S®ZVA-Z220	10 MHz to 300 MHz
	R&S®ZVA-Z325	10 MHz to 400 MHz
	R&S®ZVA-Z500	10 MHz to 400 MHz

Reference output (REF OUT)

Connector type		SMA, female
Frequency range	R&S®ZVA-Z75	10 MHz to 300 MHz
	R&S®ZVA-Z90E	10 MHz to 300 MHz
	R&S®ZVA-Z110 and R&S®ZVA-Z110E	10 MHz to 300 MHz
	R&S®ZVA-Z140	10 MHz to 300 MHz
	R&S®ZVA-Z170	10 MHz to 300 MHz
	R&S®ZVA-Z220	10 MHz to 300 MHz
	R&S®ZVA-Z325	10 MHz to 400 MHz
	R&S®ZVA-Z500	10 MHz to 400 MHz

Attenuation control input (ATT), R&S®ZVA-Z90E and R&S®ZVA-Z110E only

Connector type	for connection to the EXTATT CTRL output of the R&S®ZVA vector network analyzer with R&S®ZVA-B8 option	series 711 connector, 3 pins

System characteristics

Trace stability	R&S®ZVA-Z75	typ. <0.2 dB and typ. <2°
	R&S®ZVA-Z90E	typ. <0.2 dB and typ. <2°
	R&S®ZVA-Z110 and R&S®ZVA-Z110E	typ. <0.2 dB and typ. <2°
	R&S®ZVA-Z140	typ. <0.6 dB and typ. <6°
	R&S®ZVA-Z170	typ. <0.6 dB and typ. <6°
	R&S®ZVA-Z220	typ. <0.6 dB and typ. <6°
	R&S®ZVA-Z325	typ. <0.8 dB and typ. <8°
	R&S®ZVA-Z500	typ. <1.0 dB and typ. <10°
Source match (without system error correction)	R&S®ZVA-Z75	>17 dB, typ. >30 dB
	R&S®ZVA-Z90E	typ. >30 dB
	R&S®ZVA-Z110 and R&S®ZVA-Z110E	>17 dB, typ. >30 dB
	R&S®ZVA-Z140	typ. >25 dB
	R&S®ZVA-Z170	typ. >25 dB
	R&S®ZVA-Z220	typ. >25 dB
	R&S®ZVA-Z325	typ. >20 dB
	R&S®ZVA-Z500	typ. >17 dB
Directivity (without system error correction)	R&S®ZVA-Z75	>21 dB, typ. >37 dB
	R&S®ZVA-Z90E	typ. >30 dB
	R&S®ZVA-Z110 and R&S®ZVA-Z110E	>21 dB, typ. >30 dB
	R&S®ZVA-Z140	typ. >25 dB
	R&S®ZVA-Z170	typ. >25 dB
	R&S®ZVA-Z220	typ. >25 dB
	R&S®ZVA-Z325	typ. >20 dB
	R&S®ZVA-Z500	typ. >15 dB
Effective source match (with system error correction)	R&S®ZVA-Z75	typ. >35 dB
	R&S®ZVA-Z90E	typ. >35 dB
	R&S®ZVA-Z110 and R&S®ZVA-Z110E	typ. >35 dB
	R&S®ZVA-Z140	typ. >30 dB
	R&S®ZVA-Z170	typ. >30 dB
	R&S®ZVA-Z220	typ. >30 dB
	R&S®ZVA-Z325	typ. >30 dB
	R&S®ZVA-Z500	typ. >30 dB
Effective directivity (with system error correction)	R&S®ZVA-Z75	typ. >35 dB
	R&S®ZVA-Z90E	typ. >35 dB
	R&S®ZVA-Z110 and R&S®ZVA-Z110E	typ. >35 dB
	R&S®ZVA-Z140	typ. >30 dB
	R&S®ZVA-Z170	typ. >30 dB
	R&S®ZVA-Z220	typ. >30 dB
	R&S®ZVA-Z325	typ. >30 dB
	R&S®ZVA-Z500	typ. >30 dB
Dynamic range	R&S®ZVA-Z75	>90 dB, typ. >110 dB
	R&S®ZVA-Z90E	>90 dB, typ. >110 dB
	R&S®ZVA-Z110 and R&S®ZVA-Z110E	>95 dB, typ. >110 dB
	R&S®ZVA-Z140	>85 dB, typ. >100 dB
	R&S®ZVA-Z170	>75 dB, typ. >90 dB
	R&S®ZVA-Z220	>75 dB, typ. >90 dB
	R&S®ZVA-Z325	>80 dB, typ. >90 dB
	R&S®ZVA-Z500	>50 dB, typ. >65 dB
The dynamic range is defined as the difference between the data trace of the transmission magnitude with maximum test port output power and both test ports through-connected and the RMS value of the data trace of the transmission magnitude produced by noise and crosstalk with test ports short-circuited. The specification is valid without system error correction and at 10 Hz measurement bandwidth. The dynamic range can be increased by using a measurement bandwidth of 1 Hz.		

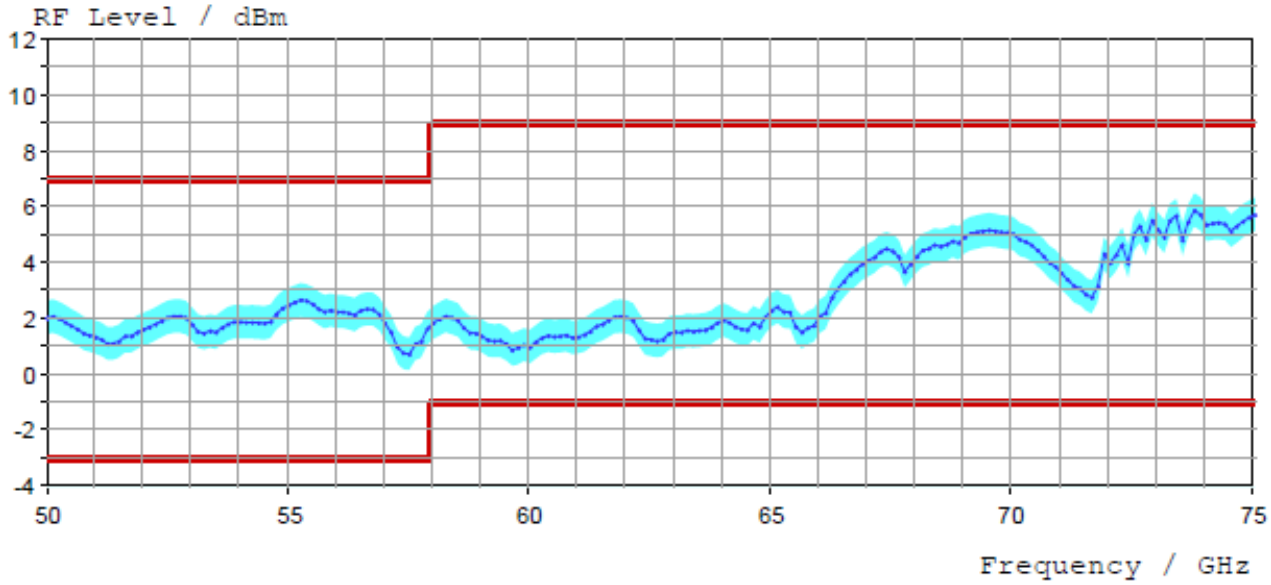

Test port output power versus frequency of the R&S®ZVA-Z75.

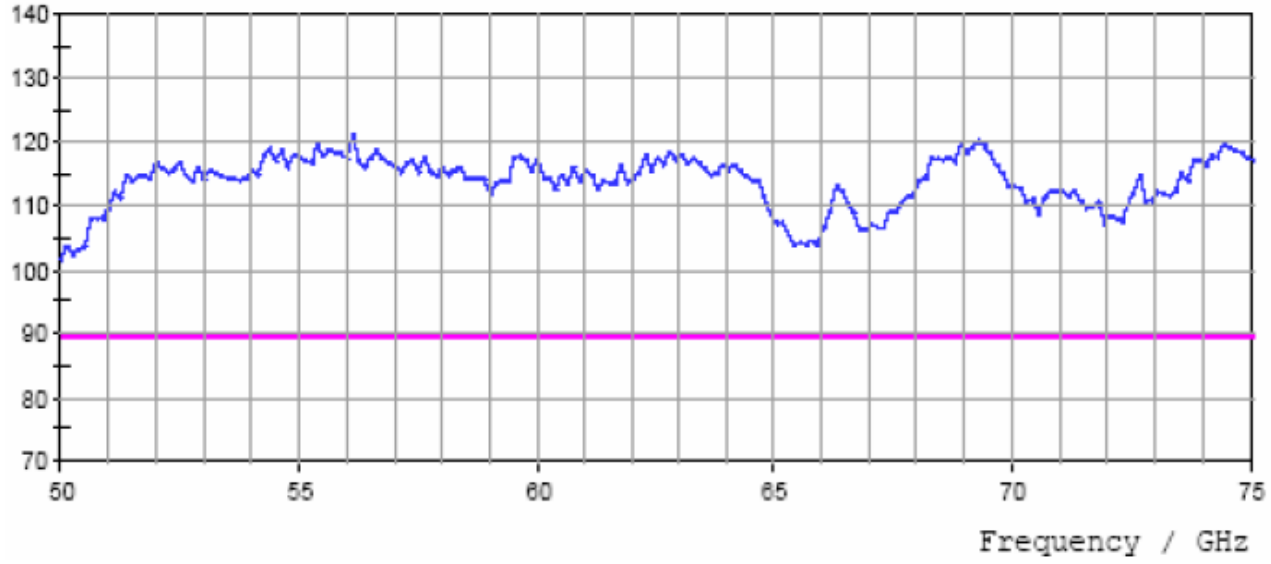

Dynamic range in dB versus frequency of the R&S®ZVA-Z75.

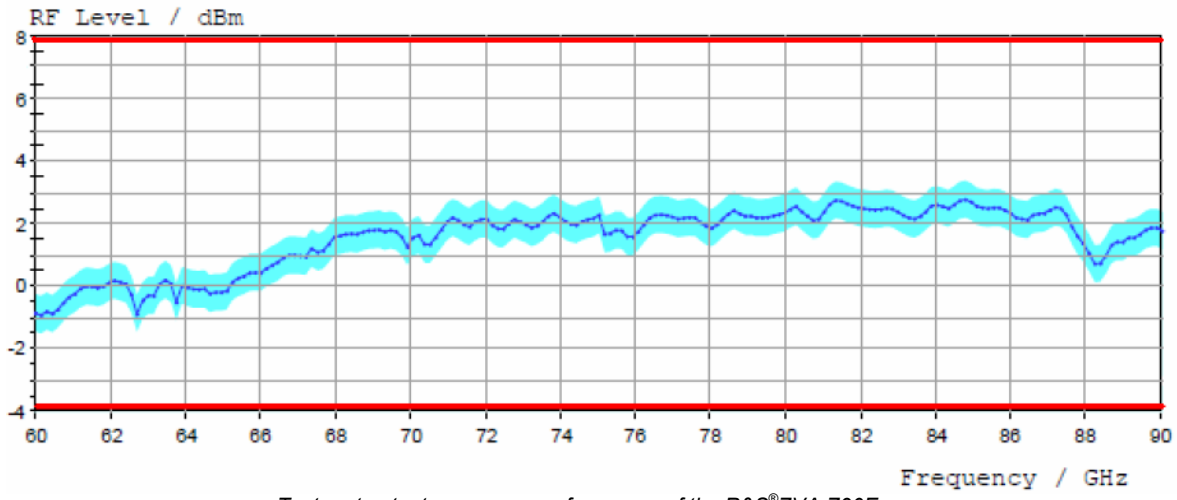

Test port output power versus frequency of the R&S®ZVA-Z90E.

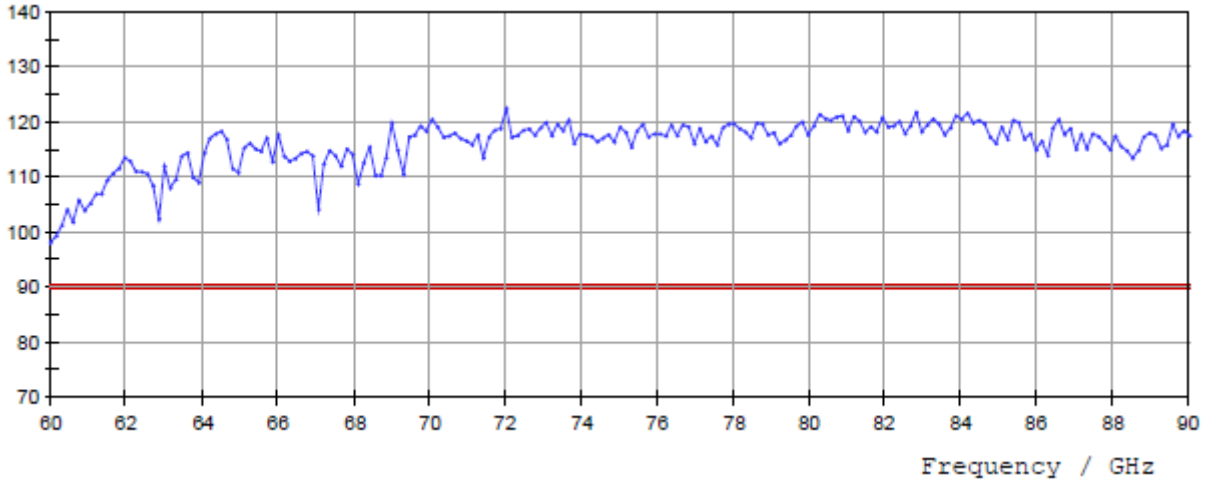

Dynamic range in dB versus frequency of the R&S®ZVA-Z90E.

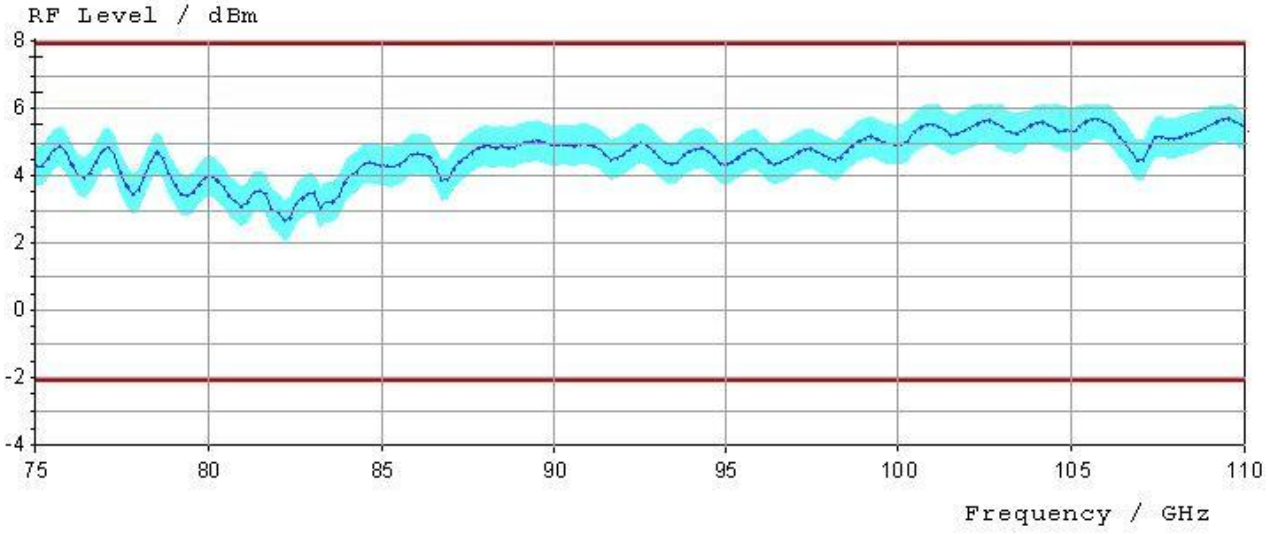

Test port output power versus frequency of the R&S®ZVA-Z110.

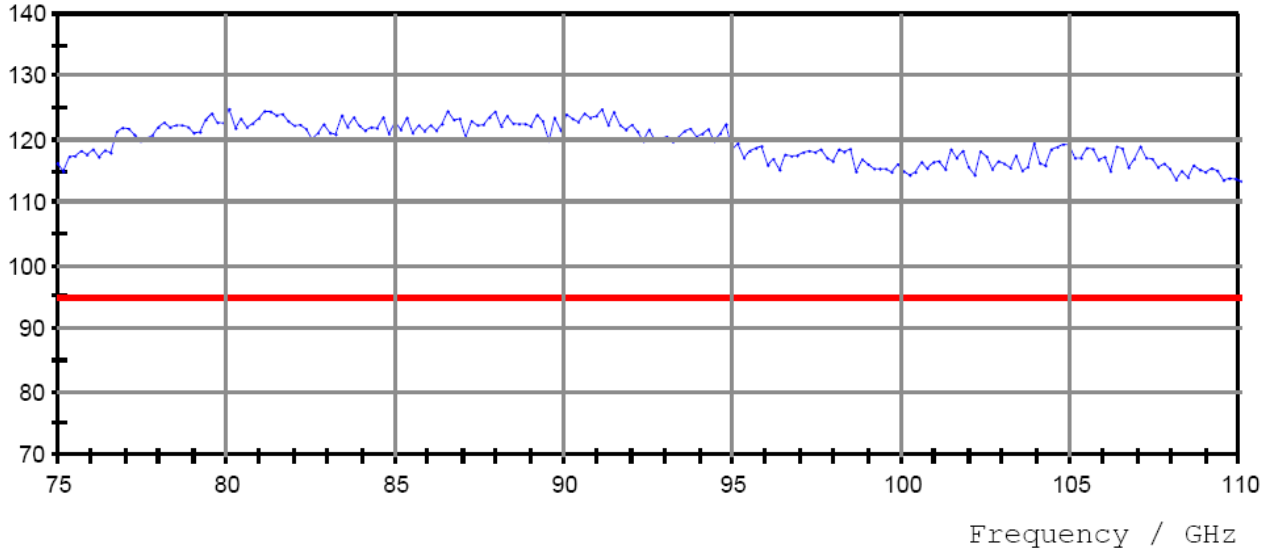

Dynamic range in dB versus frequency of the R&S®ZVA-Z110.

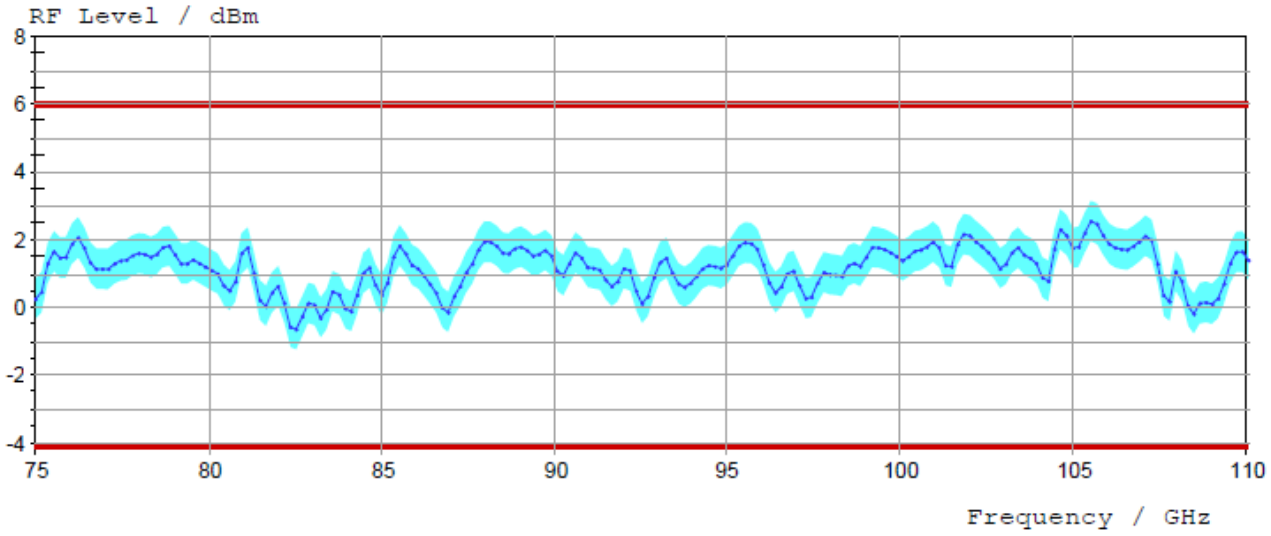

Test port output power versus frequency of the R&S®ZVA-Z110E.

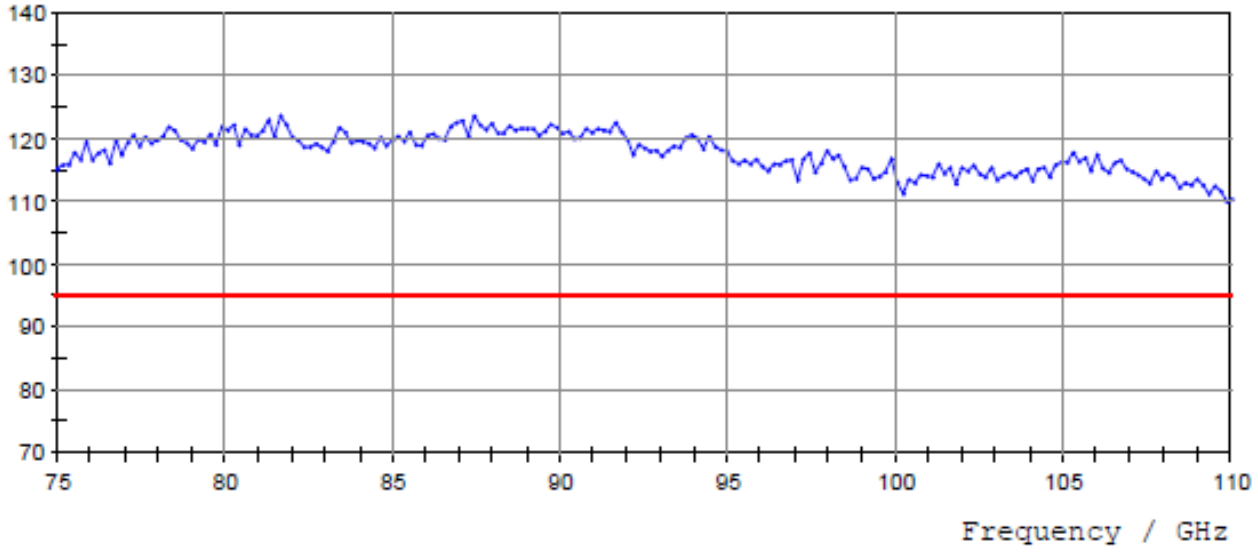

Dynamic range in dB versus frequency of the R&S®ZVA-Z110E.

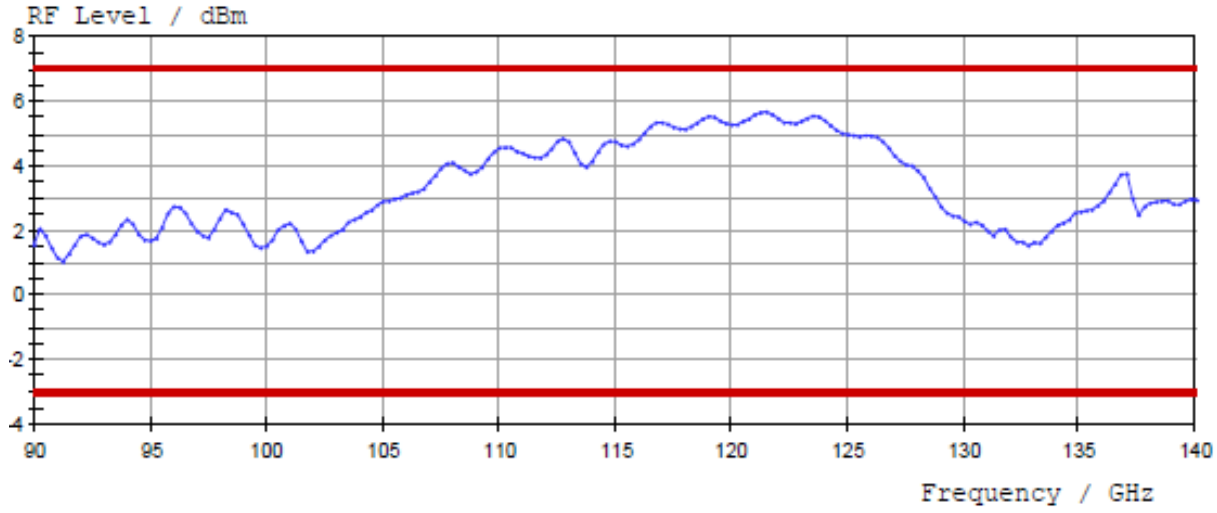

Test port output power versus frequency of the R&S®ZVA-Z140.

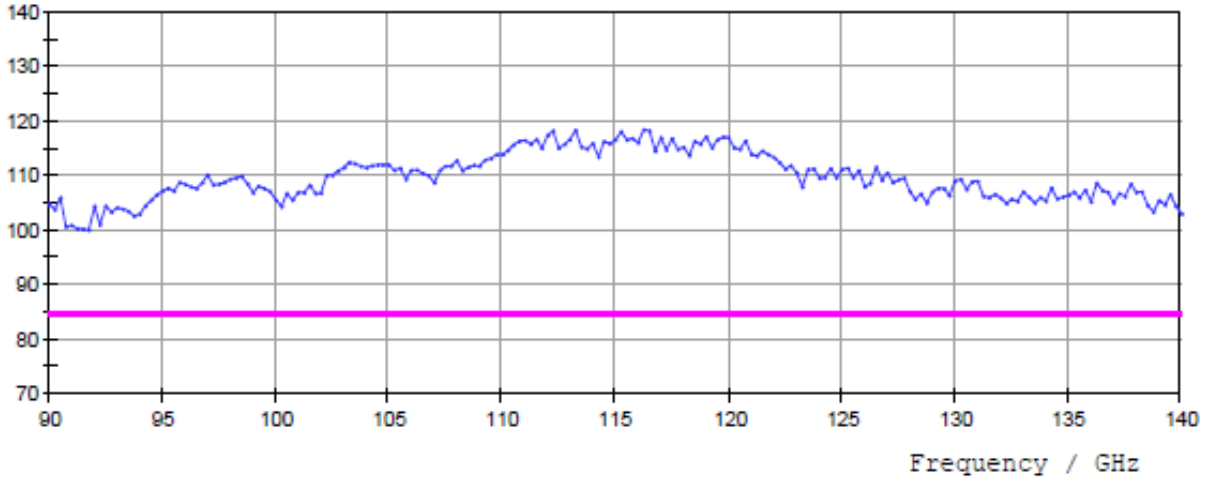

Dynamic range in dB versus frequency of the R&S®ZVA-Z140.

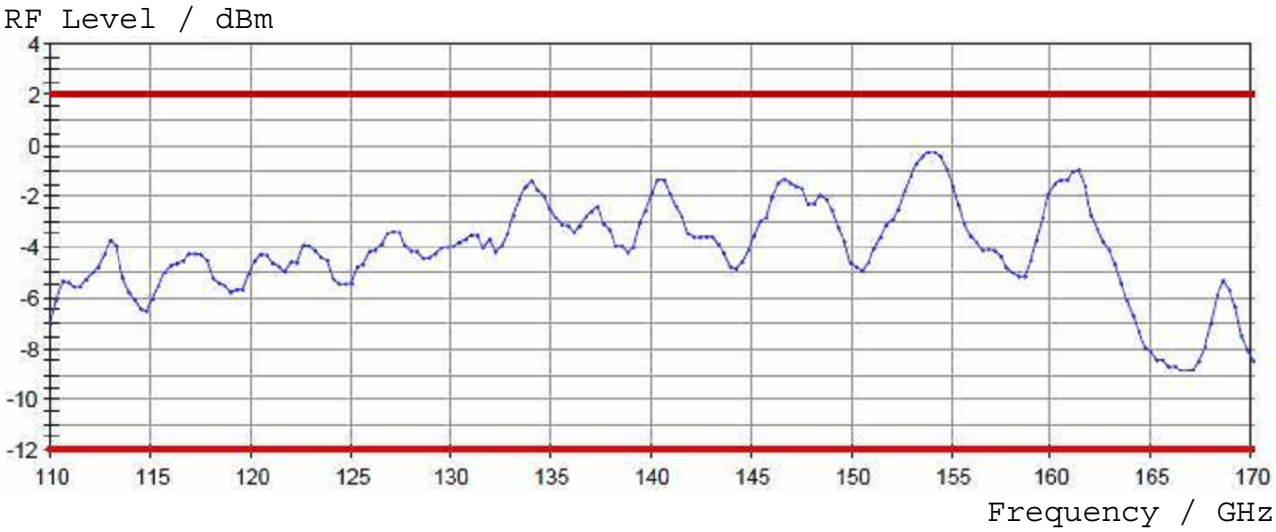

Test port output power versus frequency of the R&S®ZVA-Z170.

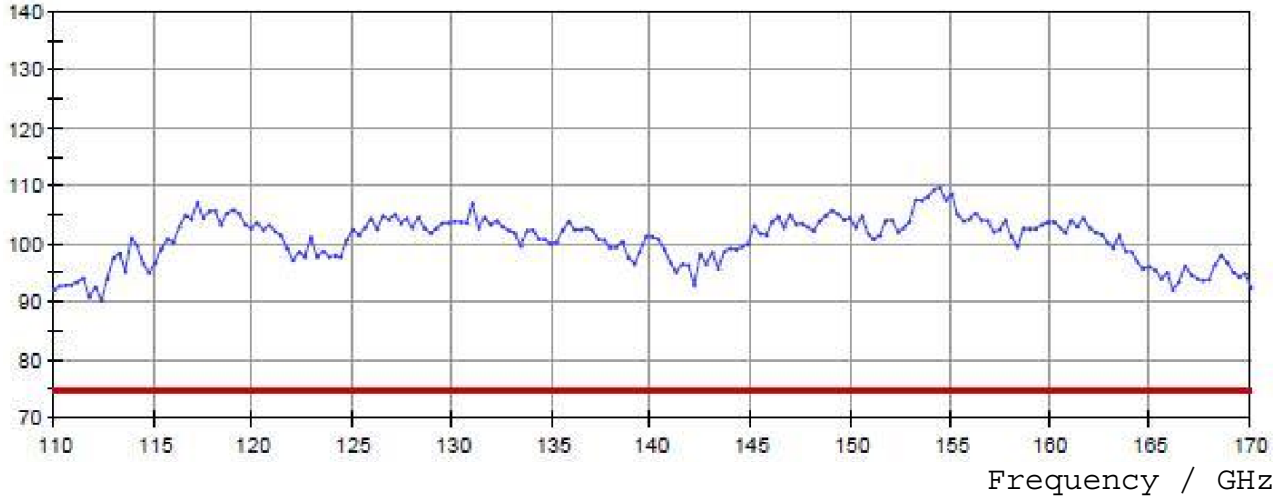

Dynamic range in dB versus frequency of the R&S®ZVA-Z170.

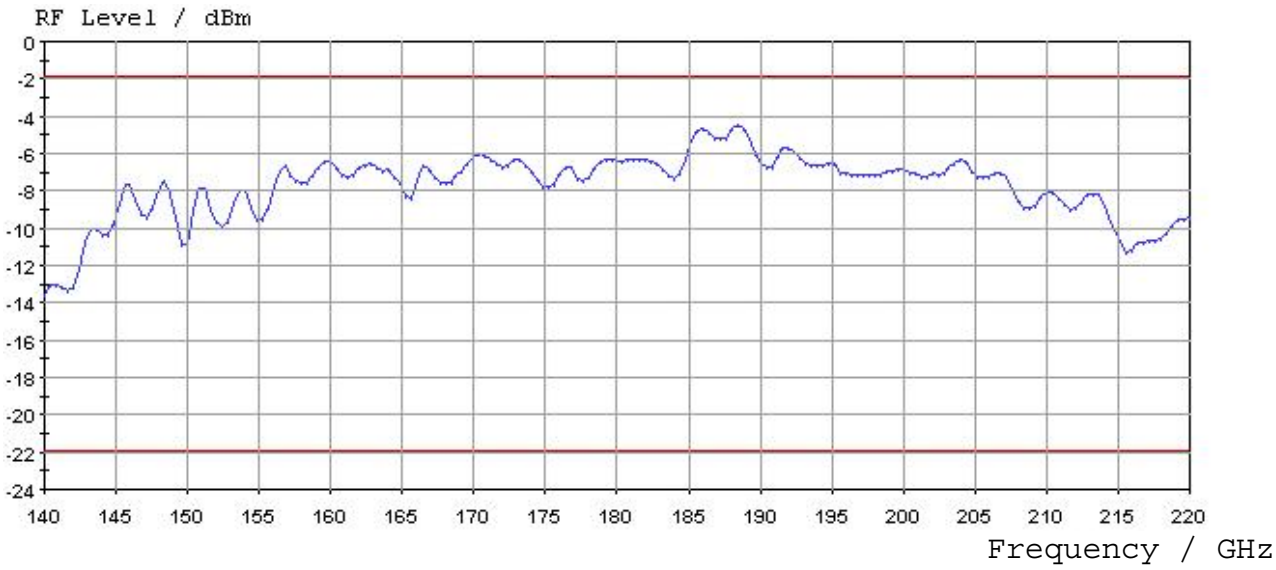

Test port output power versus frequency of the R&S®ZVA-Z220.

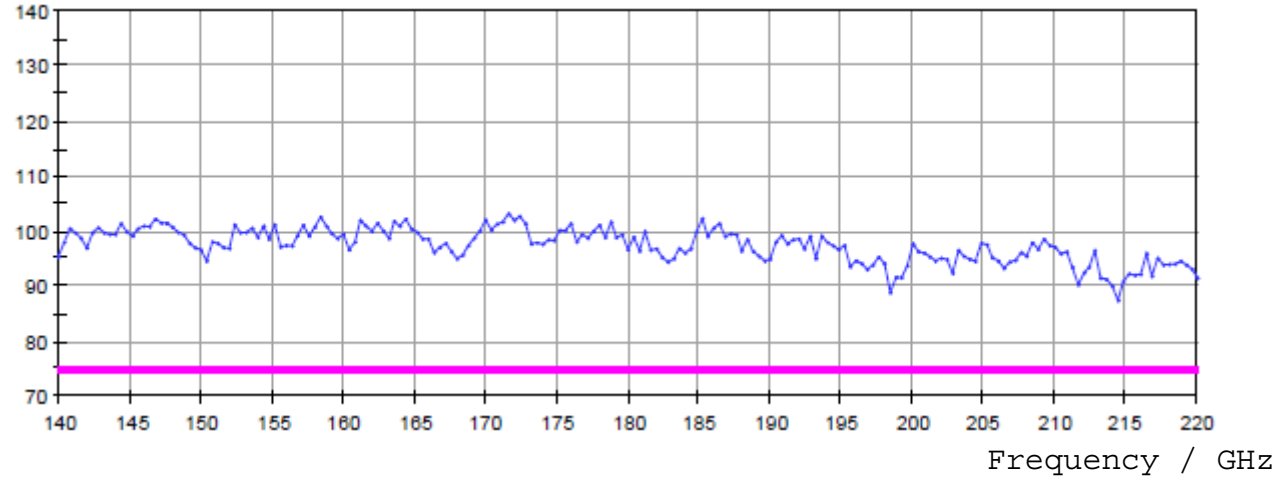

Dynamic range in dB versus frequency of the R&S®ZVA-Z220.

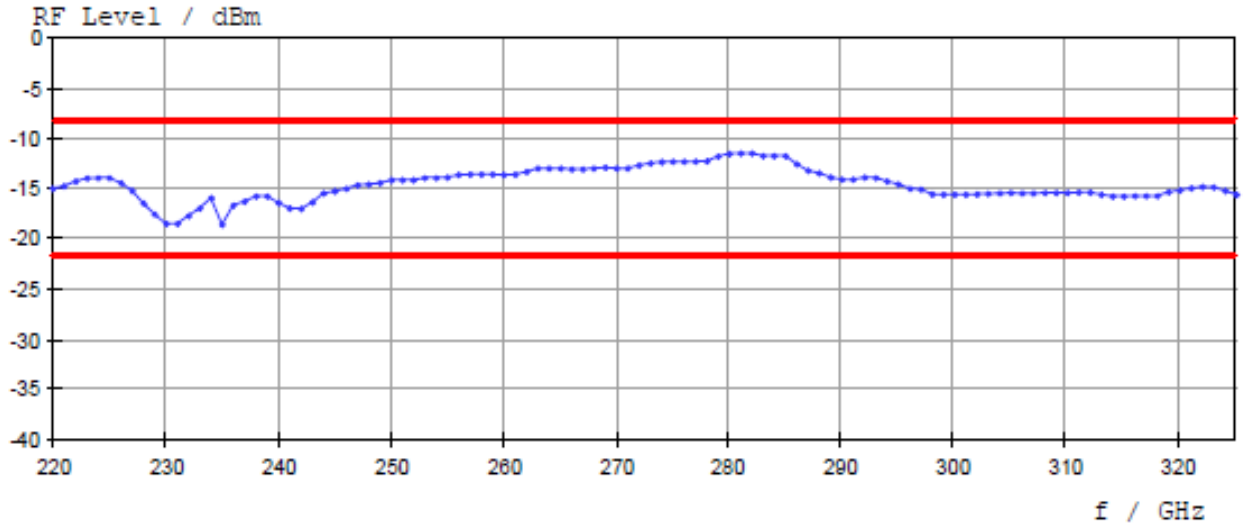

Test port output power versus frequency of the R&S®ZVA-Z325.

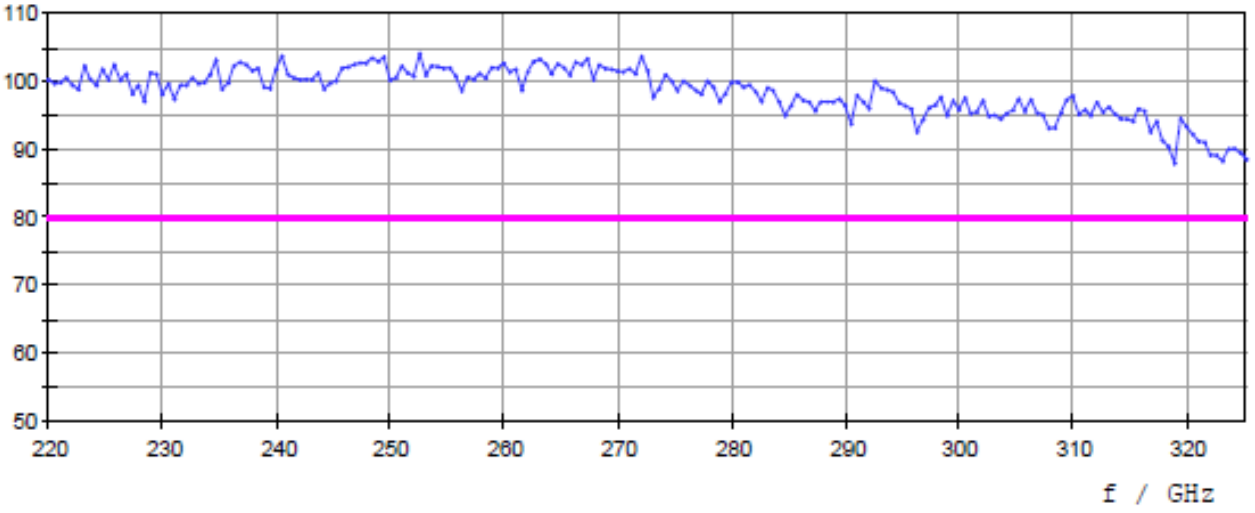

Dynamic range in dB versus frequency of the R&S®ZVA-Z325.

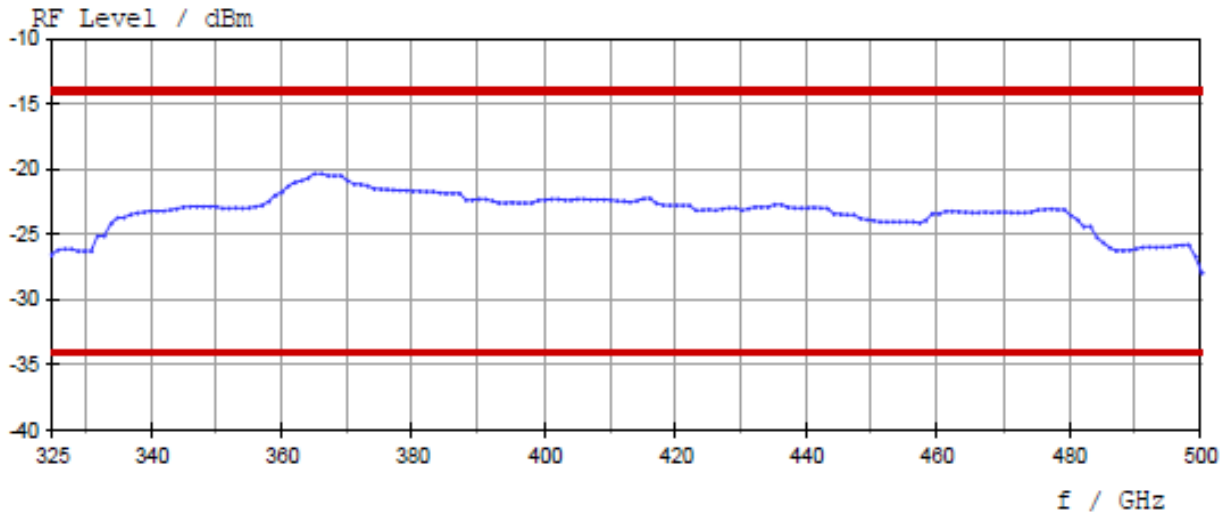

Test port output power versus frequency of the R&S®ZVA-Z500.

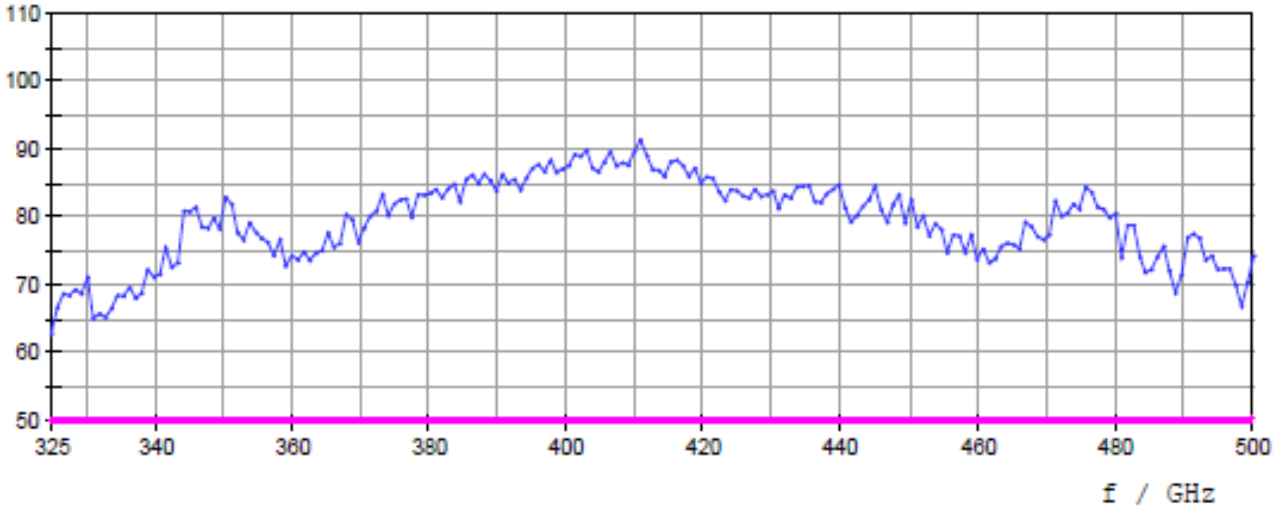

Dynamic range in dB versus frequency of the R&S®ZVA-Z500.

Power supply input

Connector type		DIN 45323 power connector
Voltage		+9 V ± 540 mV
Current	R&S®ZVA-Z75, R&S®ZVA-Z90E, R&S®ZVA-Z110, R&S®ZVA-Z110E, R&S®ZVA-Z140, R&S®ZVA-Z170, R&S®ZVA-Z220, and R&S®ZVA-Z325	<1.1 A
	R&S®ZVA-Z500	<1.6 A

General specifications

Temperature loading	operating temperature range	+18 °C to +28 °C
	permissible temperature range	+5 °C to +40 °C
	storage temperature range	–40 °C to +70 °C
		in line with IEC 60068-2-1 and IEC 60068-2-2
Damp heat		+40 °C at 80 % rel. humidity, in line with IEC 60068-2-30
Mechanical resistance	vibration, sinusoidal	5 Hz to 150 Hz, in line with IEC 60068-2-6
	vibration, random	10 Hz to 300 Hz, in line with IEC 60068-2-64
	shock	40 g shock spectrum, in line with IEC 60068-2-27, MIL-STD-810
Dimensions (W × H × D)	with feet height adjusted to 12.1 mm (0.5 in)	
	R&S®ZVA-Z75	413 mm × 110 mm × 114 mm (16.3 in × 4.3 in × 4.5 in)
	R&S®ZVA-Z90E	371 mm × 110 mm × 114 mm (14.6 in × 4.3 in × 4.5 in)
	R&S®ZVA-Z110 and R&S®ZVA-Z110E	361 mm × 110 mm × 114 mm (14.2 in × 4.3 in × 4.5 in)
	R&S®ZVA-Z140	355 mm × 110 mm × 114 mm (14.0 in × 4.3 in × 4.5 in)
	R&S®ZVA-Z170	321 mm × 110 mm × 114 mm (12.6 in × 4.3 in × 4.5 in)
	R&S®ZVA-Z220	328 mm × 110 mm × 114 mm (12.9 in × 4.3 in × 4.5 in)
	R&S®ZVA-Z325	324 mm × 110 mm × 114 mm (12.8 in × 4.3 in × 4.5 in)
	R&S®ZVA-Z500	304 mm × 110 mm × 114 mm (12.0 in × 4.3 in × 4.5 in)
Number of feet	alternatively	3 or 4
Feet height	user-adjustable	12.1 mm to 29.1 mm (0.5 in to 1.1 in)
Weight		3 kg (7 lb)
Shipping weight		5 kg (11 lb)

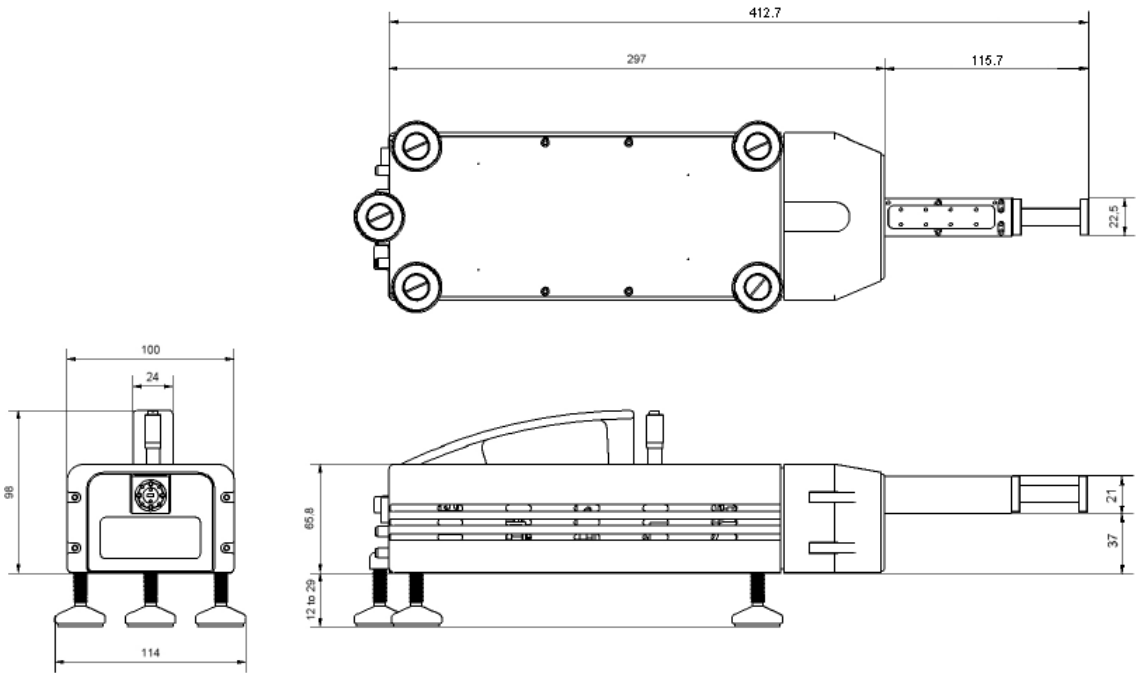

Dimensions (in mm) of the R&S®ZVA-Z75.

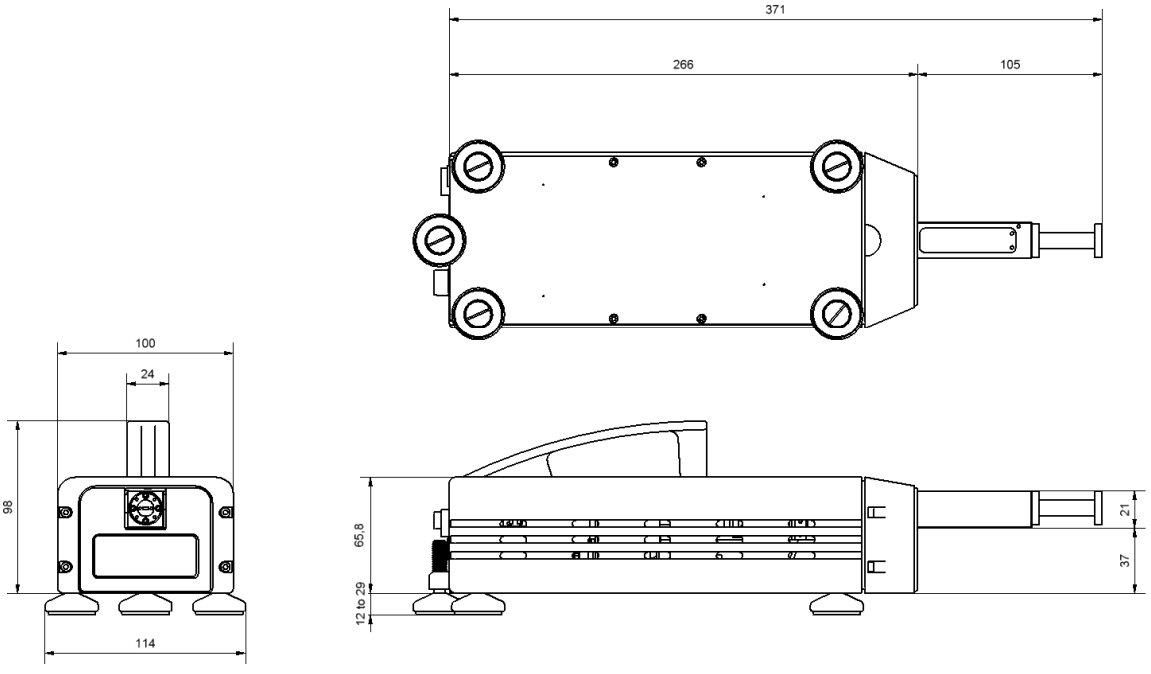

Dimensions (in mm) of the R&S®ZVA-Z90E.

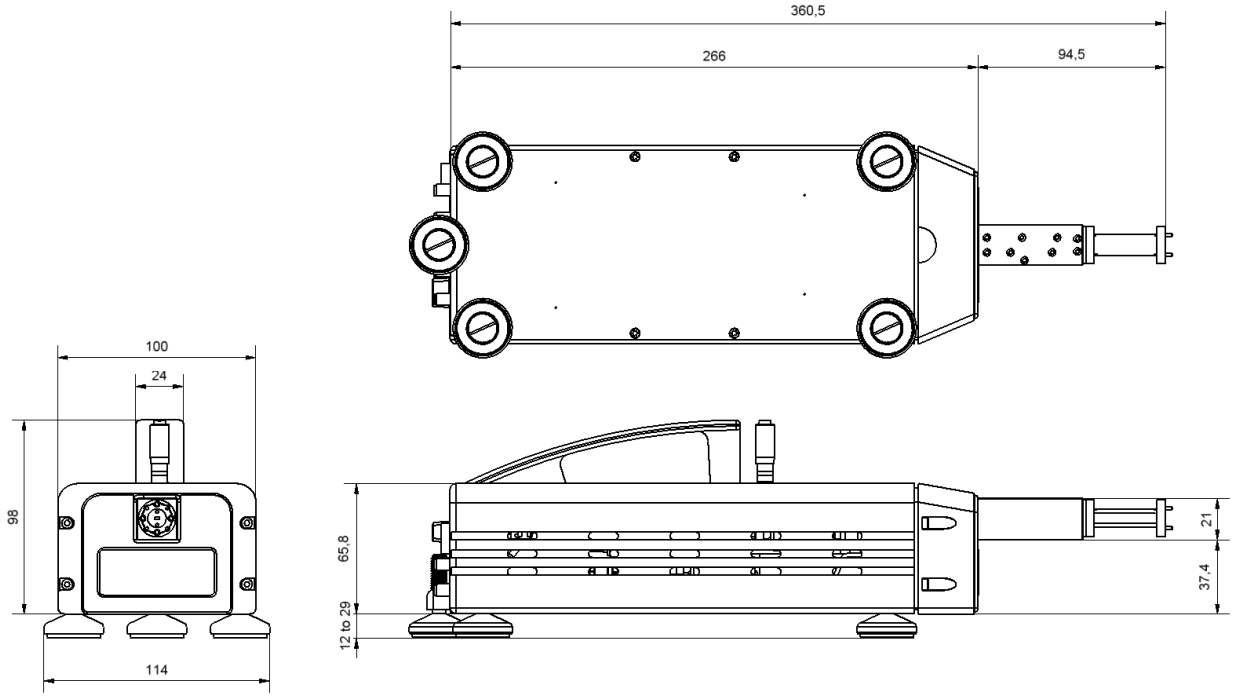

Dimensions (in mm) of the R&S®ZVA-Z110.

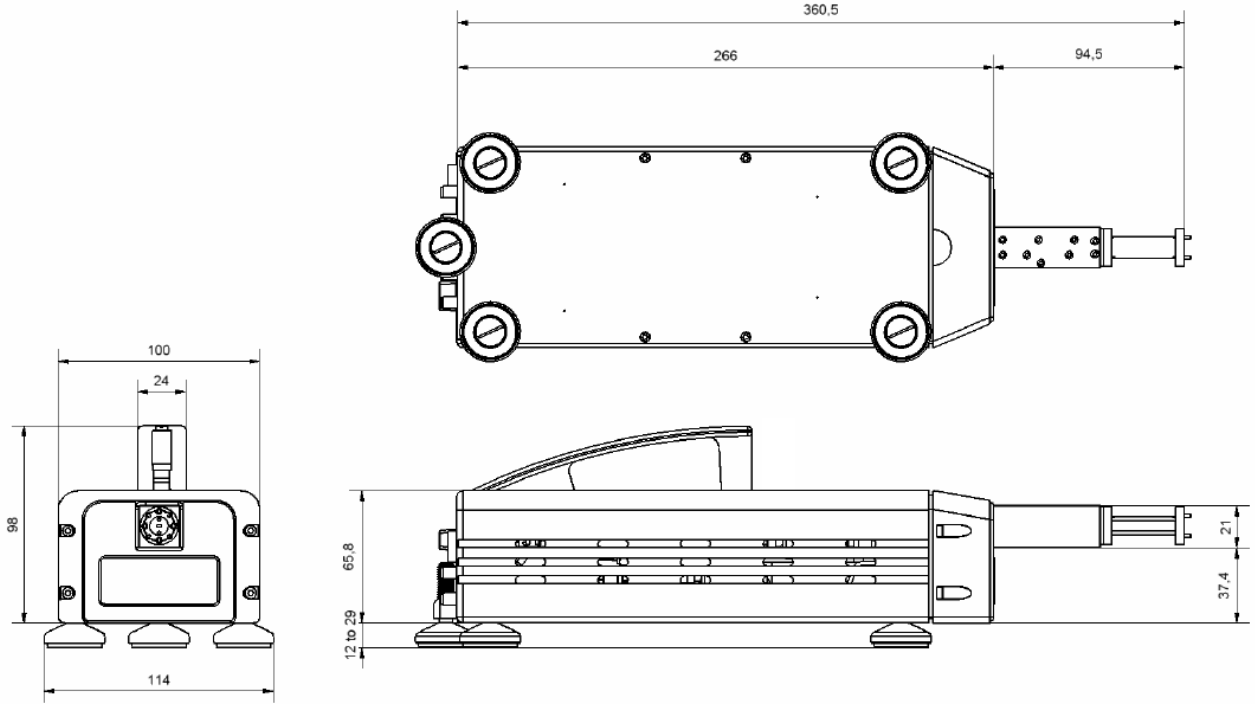

Dimensions (in mm) of the R&S®ZVA-Z110E.

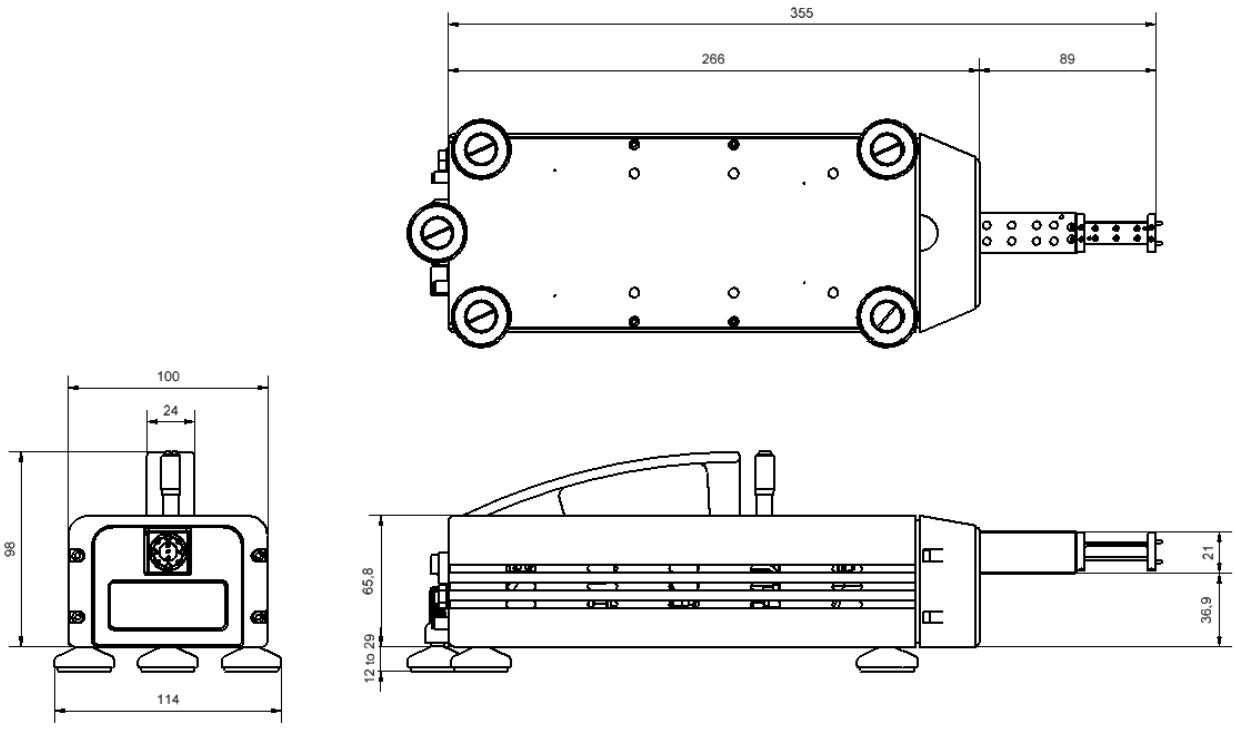

Dimensions (in mm) of the R&S®ZVA-Z140.

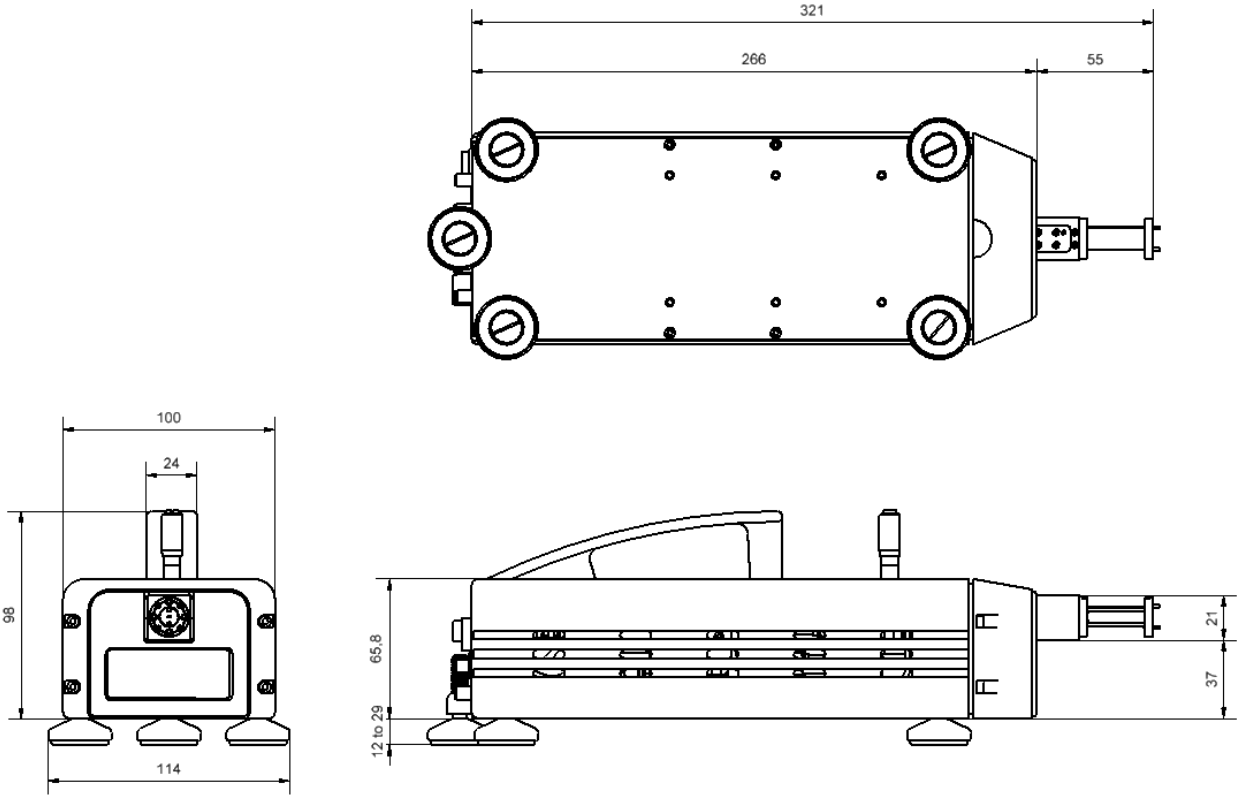

Dimensions (in mm) of the R&S®ZVA-Z170.

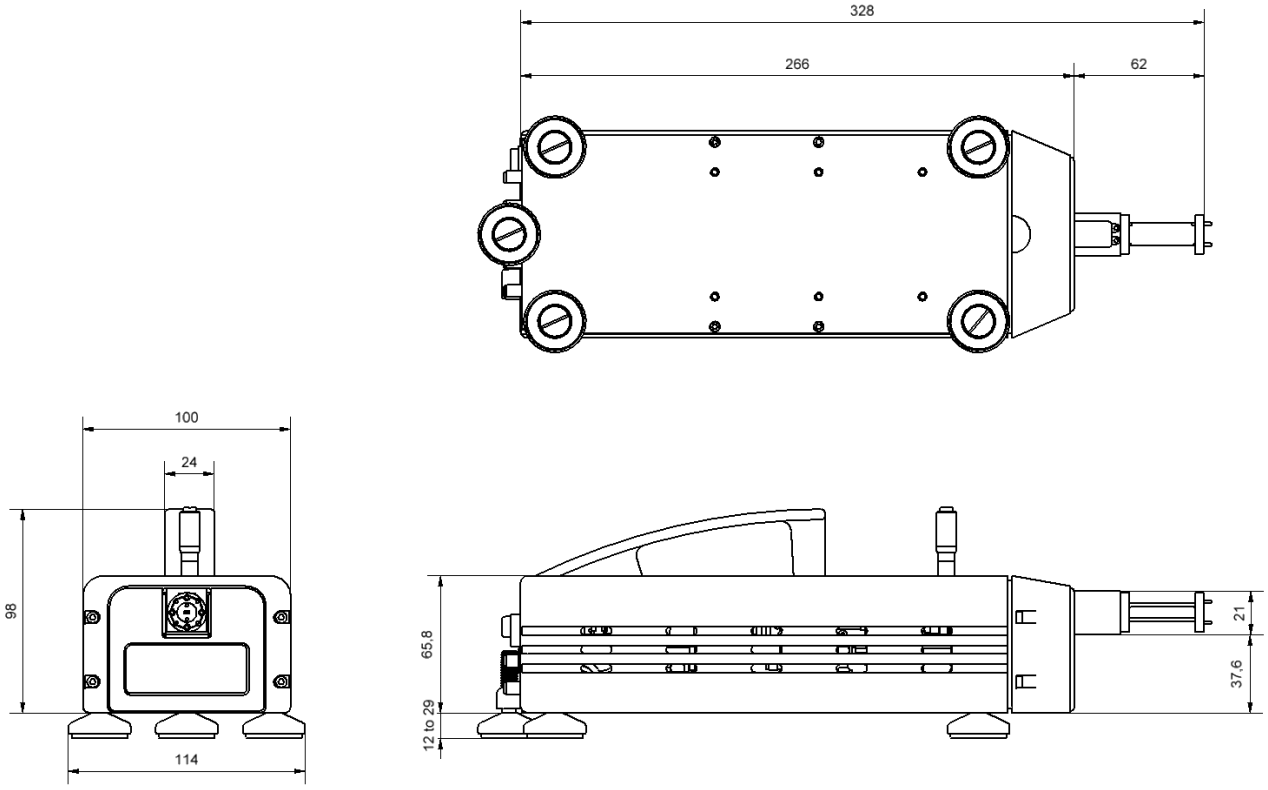

Dimensions (in mm) of the R&S®ZVA-Z220.

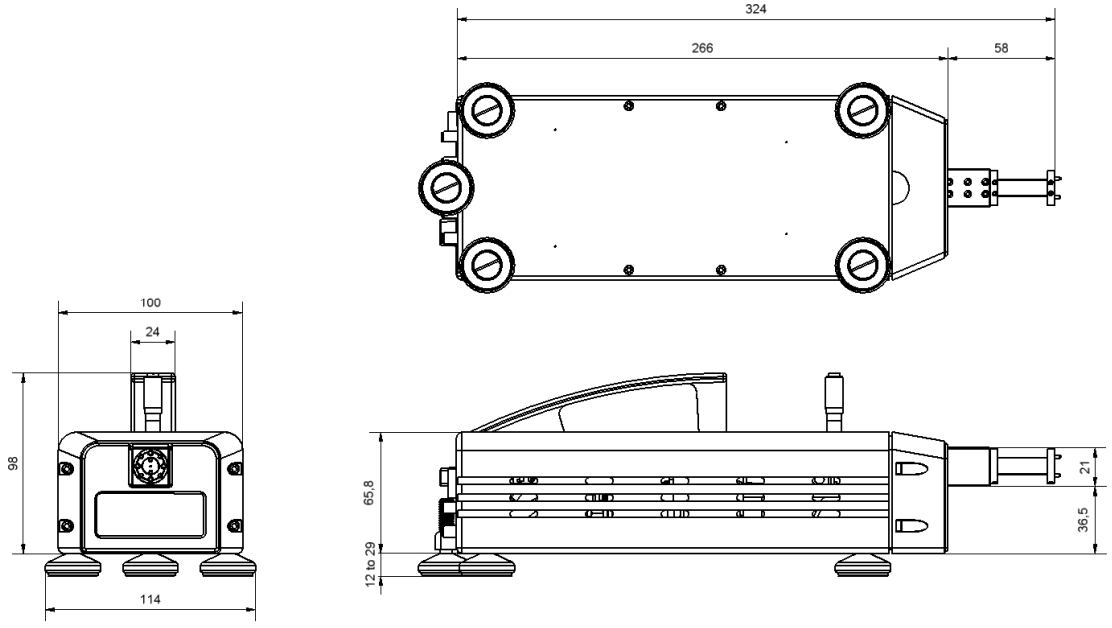

Dimensions (in mm) of the R&S®ZVA-Z325.

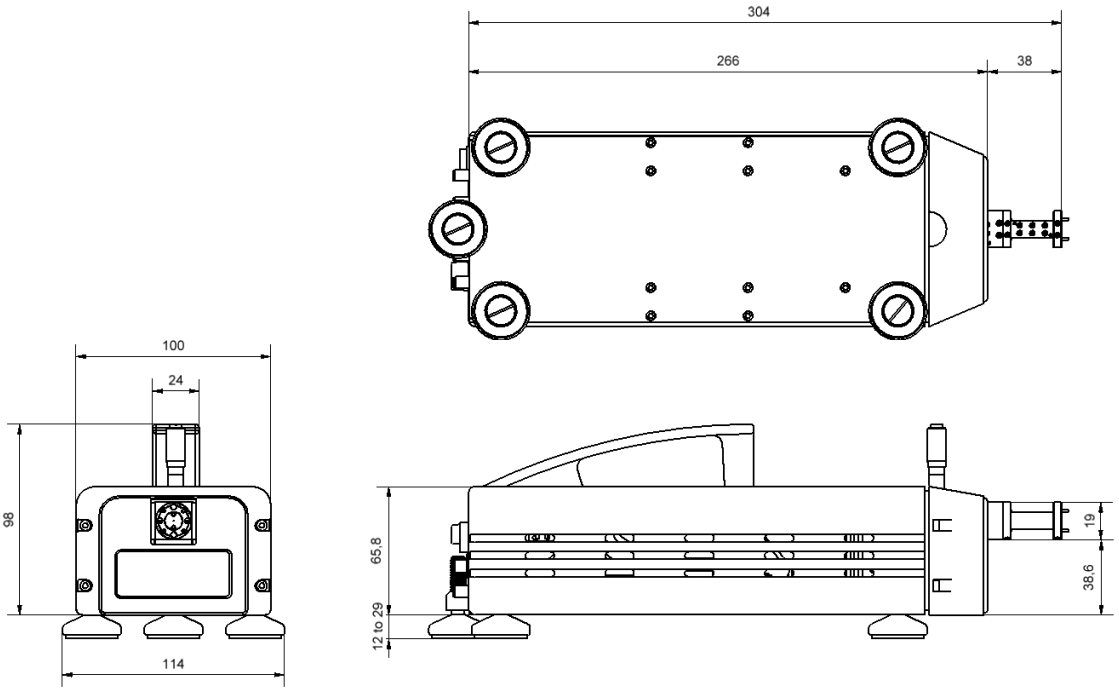

Dimensions (in mm) of the R&S®ZVA-Z500.

Ordering information

Designation	Type	Order No.
Converter WR15	R&S®ZVA-Z75	1307.7400.02
Converter WR12	R&S®ZVA-Z90E	1307.7600.02
Converter WR10	R&S®ZVA-Z110	1307.7000.02
Converter WR10	R&S®ZVA-Z110E	1307.7000.40
Converter WR08	R&S®ZVA-Z140	1307.7800.02
Converter WR06	R&S®ZVA-Z170	1311.8707.02
Converter WR05	R&S®ZVA-Z220	1307.8006.02
Converter WR03	R&S®ZVA-Z325	1307.7200.02
Converter WR02	R&S®ZVA-Z500	1314.5509.02
Test Port Cable 3.5 mm female to 3.5 mm male, length 965 mm (two cables per converter required)	R&S®ZV-Z193	1306.4520.36
Waveguide Calibration Kit WR15 (without sliding matches)	R&S®ZV-WR15	1307.7500.30
Waveguide Calibration Kit WR15 (with sliding match)	R&S®ZV-WR15	1307.7500.31
Waveguide Calibration Kit WR12 (without sliding matches)	R&S®ZV-WR12	1307.7700.10
Waveguide Calibration Kit WR12 (with sliding match)	R&S®ZV-WR12	1307.7700.11
Waveguide Calibration Kit WR10 (without sliding matches)	R&S®ZV-WR10	1307.7100.10
Waveguide Calibration Kit WR10 (with sliding match)	R&S®ZV-WR10	1307.7100.11
Waveguide Calibration Kit WR08 (without sliding matches)	R&S®ZV-WR08	1307.7900.10
Waveguide Calibration Kit WR08 (with sliding match)	R&S®ZV-WR08	1307.7900.11
Waveguide Calibration Kit WR06 (without sliding matches)	R&S®ZV-WR06	1311.8807.10
Waveguide Calibration Kit WR06 (with sliding match)	R&S®ZV-WR06	1311.8807.11
Waveguide Calibration Kit WR05 (without sliding matches)	R&S®ZV-WR05	1307.8106.10
Waveguide Calibration Kit WR05 (with sliding match)	R&S®ZV-WR05	1307.8106.11
Waveguide Calibration Kit WR03 (without sliding matches)	R&S®ZV-WR03	1307.7300.30
Waveguide Calibration Kit WR03 (with sliding match)	R&S®ZV-WR03	1307.7300.31
Waveguide Calibration Kit WR02 (without sliding match)	R&S®ZV-WR02	1314.5550.10
External Attenuator Control for R&S®ZVA-Z90E and R&S®ZVA-Z110E	R&S®ZVA-B8	1307.6026.02
Converter Control Software	R&S®ZVA-K8	1307.7022.02

Service you can rely on

- Worldwide
- Local and personalized
- Customized and flexible
- Uncompromising quality
- Long-term dependability

About Rohde&Schwarz

Rohde&Schwarz is an independent group of companies specializing in electronics. It is a leading supplier of solutions in the fields of test and measurement, broadcasting, radiomonitoring and radiolocation, as well as secure communications. Established more than 75 years ago, Rohde&Schwarz has a global presence and a dedicated service network in over 70 countries. Company headquarters are in Munich, Germany.

Environmental commitment

- Energy-efficient products
- Continuous improvement in environmental sustainability
- ISO 14001-certified environmental management system

Certified Quality System
ISO 9001

Rohde&Schwarz GmbH&Co. KG
www.rohde-schwarz.com

Regional contact

- Europe, Africa, Middle East | +49 89 4129 12345
  customersupport@rohde-schwarz.com
- North America | 1 888 TEST RSA (1 888 837 87 72)
  customer.support@rsa.rohde-schwarz.com
- Latin America | +1 410 910 79 88
  customersupport.la@rohde-schwarz.com
- Asia/Pacific | +65 65 13 04 88
  customersupport.asia@rohde-schwarz.com
- China | +86 800 810 8228/+86 400 650 5896
  customersupport.china@rohde-schwarz.com

R&S® is a registered trademark of Rohde&Schwarz GmbH&Co. KG
Trade names are trademarks of the owners | Printed in Germany (ch)
PD 5214.2033.22 | Version 09.00 | July 2012 | R&S®ZVA-Zxx
Subject to change
© 2008 - 2012 Rohde&Schwarz GmbH&Co. KG | 81671 München, Germany

5214203322